BOSCH

Register your new device on MyBosch now and get free benefits: **bosch-home.com/welcome**

MyBosch

Tumble dryer

WQG24101BY

[en] User manual and installation instructions

Further information and explanations are available online:

Table of contents

1 Safety 4
1.1 General information 4
1.2 Intended use 4
1.3 Restriction on user group 4
1.4 Safe installation 5
1.5 Safe use 7
1.6 Safe cleaning and maintenance 9

2 Preventing material damage 11

3 Environmental protection and saving energy 11
3.1 Disposing of packaging 11
3.2 Saving energy 11
3.3 Energy saving mode 12

4 Installation and connection 12
4.1 Unpacking the appliance 12
4.2 Contents of package 12
4.3 Requirements for the installation location 12
4.4 Water outlet hose 13
4.5 Aligning the appliance 16
4.6 Connecting the appliance to the electricity supply 16

5 Familiarising yourself with your appliance 17
5.1 Appliance 17
5.2 Control panel 18

6 Display 19

7 Buttons 21

8 Programmes 24
8.1 Automatic programmes 24
8.2 Timed programmes 25

9 Accessories 27

10 Laundry 28
10.1 Preparing the laundry 28

11 Basic operation 28
11.1 Switching on the appliance ... 28
11.2 Setting a programme 28
11.3 Opening the door 28
11.4 Loading laundry 29
11.5 Starting the programme 29
11.6 Adding laundry 29
11.7 Cancelling the programme 29
11.8 Unloading the laundry 29
11.9 Switching off the appliance ... 29
11.10 Fluff filter 29
11.11 Filter system on the base unit 31
11.12 Condensation container 33

12 Dryness level 33
12.1 Changing the dryness level ... 34
12.2 Adjusting the dryness level ... 34

13 Childproof lock 34
13.1 Activating the childproof lock 34
13.2 Deactivating the childproof lock 34

14 Basic settings 35
14.1 Overview of the basic settings 35
14.2 Changing the basic settings 35

15 Cleaning and servicing 35
15.1 Base unit 35
15.2 Moisture sensor 38

16 Troubleshooting..... 39

17 Transportation, storage and disposal 43
17.1 Disposing of old appliance ... 43

18 Customer Service..... 43
18.1 Product number (E-Nr.) and production number (FD)..... 44

19 Consumption values..... 45

20 Technical data 47

1 Safety

Observe the following safety instructions.

1.1 General information

- Read this instruction manual carefully.
- Keep the instruction manual and the product information safe for future reference or for the next owner.
- Do not connect the appliance if it has been damaged in transit.

1.2 Intended use

Only use this appliance:
- for drying and freshening up fabrics that are washed with water and suitable for dryers.
- in private households and in enclosed spaces in a domestic environment.
- Up to an altitude of 4000 m above sea level.

1.3 Restriction on user group

This appliance may be used by children aged 8 or over and by people who have reduced physical, sensory or mental abilities or inadequate experience and/or knowledge, provided that they are supervised or have been instructed on how to use the appliance safely and have understood the resulting dangers.
Do not let children play with the appliance.
Cleaning and user maintenance must not be performed by children unless they are being supervised.
Keep children under the age of 3 years and pets away from the appliance.

1.4 Safe installation

⚠ WARNING – Risk of electric shock!

Incorrect installation is dangerous.

- Connect and operate the appliance only in accordance with the specifications on the rating plate.
- Connect the appliance to a power supply with alternating current only via a properly installed socket with earthing.
- The protective conductor system of the domestic electrical installation must be properly installed. The installation must have a sufficiently large cross section.
- When using a residual current circuit breaker, only use a type with the ⊟ mark.
- Never equip the appliance with an external switching device, e.g. a timer or remote control.
- Never connect the appliance to a circuit that is regularly switched on and off by the energy supplier.
- When the appliance is installed, the mains plug of the power cord must be freely accessible. If free access is not possible, an all-pole isolating switch must be installed in the permanent electrical installation according to the installation regulations.
- When installing the appliance, check that the power cable is not trapped or damaged.

If the insulation of the power cord is damaged, this is dangerous.

- Never let the power cord come into contact with hot appliance parts or heat sources.
- Never let the power cord come into contact with sharp points or edges.
- Never kink, crush or modify the power cord.

⚠ WARNING – Risk of fire!

It is dangerous to use an extended power cord and non-approved adapters.

- Do not use extension cables or multiple socket strips.
- Only use adapters and power cords approved by the manufacturer.

- If the power cord is too short and a longer one is not available, please contact an electrician to have the domestic installation adapted.

⚠ WARNING – Risk of injury!

The heavy weight of the appliance may result in injury when lifted.

- Do not lift the appliance on your own.

If this appliance is not correctly installed in a washer-dryer stack, the installed appliance may fall.

- Only stack the dryer on a washing machine using the connection kit from the dryer manufacturer
  → *"Accessories", Page 27*. No other installation method is permitted.
- Do not install the appliance in a washer-dryer stack if the dryer manufacturer does not offer a suitable connection kit.
- Do not install appliances from different manufacturers and with varying depths and widths in a washer-dryer stack.
- Do not install a washer-dryer stack on a platform; the appliances may tip over.

⚠ WARNING – Risk of suffocation!

Children may put packaging material over their heads or wrap themselves up in it and suffocate.

- Keep packaging material away from children.
- Do not let children play with packaging material.

⚠ CAUTION – Risk of injury!

The appliance may vibrate or move when in use.

- Place the appliance on a clean, even, solid surface.
- Align the appliance using the appliance feet and a spirit level.

If hoses and power cords have been laid incorrectly, this causes a tripping hazard.

- Lay hoses and power cords in such a way that there is no risk of tripping.

If the appliance is moved by holding onto protruding components, such as the appliance door, the parts may break off.

- Do not move the appliance by holding onto protruding parts.

⚠ CAUTION – Risk of cutting!

Touching sharp edges on the appliance may lead to cuts.

- Do not touch the sharp edges on the appliance.
- Wear protective gloves when installing and transporting the appliance.

1.5 Safe use

⚠ WARNING – Risk of electric shock!

If the appliance or the power cord is damaged, this is dangerous.

- Never operate a damaged appliance.
- Never pull on the power cord to unplug the appliance. Always unplug the appliance at the mains.
- If the appliance or the power cord is damaged, immediately unplug the power cord or switch off the fuse in the fuse box.
- Call customer services. → *Page 43*

An ingress of moisture can cause an electric shock.

- Only use the appliance in enclosed spaces.
- Never expose the appliance to intense heat or humidity.
- Do not use steam- or high-pressure cleaners, hoses or sprays to clean the appliance.

⚠ WARNING – Risk of harm to health!

Children can lock themselves in the appliance, thereby putting their lives at risk.

- Do not install the appliance behind a door as this may obstruct the appliance door or prevent it from opening.
- With redundant appliances, unplug the power cord. Then cut through the cord and damage the lock on the appliance door beyond repair so that the appliance door will no longer close.

⚠ WARNING – Risk of suffocation!

Children may breathe in or swallow small parts, causing them to suffocate.

- Keep small parts away from children.
- Do not let children play with small parts.

⚠ WARNING – Risk of explosion!
If there is coal dust or flour in the air around the appliance, this may cause an explosion.
- Keep the area around the appliance clean during operation.

⚠ WARNING – Risk of poisoning!
Condensation water from this appliance is not suitable for drinking and may be contaminated with fluff.
- Do not drink or reuse the condensation water from the appliance.

Detergents and care products may result in poisoning if consumed.
- If accidentally swallowed, seek medical advice.
- Keep detergents and care products out of the reach of children.

⚠ WARNING – Risk of fire!
The refrigerant R290 in this appliance is environmentally friendly yet combustible and may ignite if it comes into contact with open flames or ignition sources.
- Keep naked flames and ignition sources away from the appliance.

⚠ WARNING – Risk of explosion!
If there is any residual material left in the fluff filter, this may ignite during the drying process.
- Clean the fluff filter regularly.

Highly flammable objects such as lighters or matches may ignite during the drying process.
- Remove all highly flammable objects from any pockets in your laundry before the drying process.

Unwashed laundry that has come into contact with solvents, oil, wax, wax remover, paint, grease or stain remover may ignite when drying is in progress.
- Do not place laundry in this appliance to be dried if the laundry has not been washed first.

- Rinse the laundry thoroughly with warm water and detergent before drying it in the machine.
- Do not use the appliance if industrial chemicals have been used to clean the laundry beforehand.

⚠ WARNING – Risk of fire!

If drying is interrupted early, the laundry is not cooled sufficiently and may ignite.

- Do not interrupt the drying programme early.
- If drying is interrupted early, remove the laundry immediately and spread it out.

⚠ CAUTION – Risk of injury!

The covering plate may break if you stand on or climb onto the appliance.

- Do not stand on or climb onto the appliance.

The appliance may tip over if you sit on or lean against the open door.

- Do not sit on or lean against the appliance door.
- Do not place any objects on the appliance door.

Reaching into the drum while it is still turning may cause hand injuries.

- Wait for the drum to come to a complete stop before reaching inside.

1.6 Safe cleaning and maintenance

⚠ WARNING – Risk of electric shock!

Improper repairs are dangerous.

- Never make any technical modifications to the appliance or its features.
- Repairs to the appliance should only be carried out by trained specialist staff.
- Only use genuine spare parts when repairing the appliance.
- If the power cord of this appliance is damaged, it must be replaced by the manufacturer, the manufacturer's Customer Service or a similarly qualified person in order to prevent any risk.

An ingress of moisture can cause an electric shock.

- Before cleaning, pull out the mains plug or switch off the fuse in the fuse box.
- Do not use steam- or high-pressure cleaners, hoses or sprays to clean the appliance.

⚠ WARNING – Risk of injury!

The use of non-original spare parts and non-original accessories is dangerous.

- Only use the manufacturer's original spare parts and original accessories.

⚠ WARNING – Risk of poisoning!

Poisonous fumes may be given off if you use cleaning agents that contain solvents.

- Do not use cleaning agents that contain solvents.

2 Preventing material damage

ATTENTION!
The functionality of the appliance may be impaired if you use the wrong quantity of fabric softener, detergent, care product or cleaning agent.
- Follow the dosage recommendations from the manufacturer.

Exceeding the maximum load capacity impairs the function of the appliance.
- Observe the maximum load capacity for each programme and do not exceed it.
  → *"Programmes", Page 24*

The function of the appliance may be impaired if the appliance overheats.
- Keep the ventilation opening on the appliance clear during operation.
- Make sure that the area is adequately ventilated.

Light objects such as hair and fluff may be sucked in from the ventilation opening on the appliance during operation and impair the function of the appliance.
- Keep the area around the appliance clean during operation.
- Keep light objects away from the appliance.

If you operate the appliance without a fluff guard (e.g. fluff filter, fluff collector, filter mat, etc., depending on appliance specifications), or if the fluff guard is incomplete or defective, this may result in damage to the appliance.
- Do not operate the appliance without a fluff guard, or with a fluff guard that is incomplete or defective.

Foam and foam rubber may deform or melt during the drying process.
- Do not dry laundry that contains foam or foam rubber.

Unsuitable cleaning products may damage the surfaces of the appliance.
- Do not use harsh or abrasive detergents.
- Do not use cleaning products with a high alcohol content.
- Do not use hard scouring pads or cleaning sponges.
- Clean the appliance with nothing but water and a soft, damp cloth.
- Remove all detergent residue, spray residue or other residues immediately if they come into contact with the appliance.

3 Environmental protection and saving energy

3.1 Disposing of packaging

The packaging materials are environmentally compatible and can be recycled.
- Sort the individual components by type and dispose of them separately.

3.2 Saving energy

If you follow these instructions, your appliance will use less power.
- Operate the appliance in a well-ventilated room and keep the ventilation opening on the appliance clear.
- Spin the laundry in the washing machine before drying.
- For each drying process, use the maximum load for the programs. Programmes → *Page 24*

- Do not exceed the programme's maximum load capacity. Programmes → *Page 24*
- After drying, clean the fluff filter. → *"Cleaning the fluff filter", Page 29*
- Dry the filters in the filter system of the base unit thoroughly after cleaning. → *"Filter system on the base unit", Page 31*

3.3 Energy saving mode

If you do not use the appliance for a brief period, it automatically switches to energy-saving mode. All displays go out and ▷II **Start/Reload** flashes. Energy-saving mode ends when you use the appliance again.

4 Installation and connection

4.1 Unpacking the appliance

ATTENTION!
Objects remaining in the drum that are not designed for operation with the appliance may cause material damage and damage to the appliance.
- ▸ Remove these objects, along with all supplied accessories, from the drum before starting the appliance.

1. Remove any packaging and protective covers completely from the appliance.
   → *"Disposing of packaging", Page 11*
2. Check the appliance for visible damage.
3. Open the door. → *Page 28*
4. Remove any accessories from the drum.
5. Close the door.

4.2 Contents of package

After unpacking all parts, check for any damage in transit and completeness of the delivery.

ATTENTION!
If the appliance is operated with incomplete or defective accessories, the appliance may not be able to operate properly, or this may result in material damage or damage to the appliance.
- ▸ Do not operate the appliance with incomplete or defective accessories.
- ▸ Replace the accessories in question before operating the appliance.
  → *"Accessories", Page 27*

The delivery consists of the following:
- Tumble dryer
- Accompanying documents
- Water outlet hose with connection adapter, fixing material and elbow. → *"Water outlet hose", Page 13*

4.3 Requirements for the installation location

ATTENTION!
If the appliance is tilted at an angle greater than 40°, residual water may leak out of the appliance and cause material damage.
- ▸ Tilt the appliance carefully.
- ▸ Transport the appliance in an upright position.

If residual water in the appliance freezes, this may cause damage to the appliance.
- ▸ Do not install or operate this appliance anywhere that is liable to experience frost or outdoors.

If the appliance is operated immediately after transportation, the refrigerant contained in the appliance may result in damage to the appliance.

- Immediately after transporting the appliance, leave it to rest for two hours before putting it into operation.

Installation location	Requirements
On the floor	Place the appliance on a clean, level and firm surface. Align the appliance → *Page 16*.
In a washer-dryer stack	Only use the original connection set from the dryer manufacturer when setting up this appliance in a washer-dryer stack. ■ Connection kit with pull-out worktop → *Page 27* ■ Connection kit → *Page 27* This appliance must only be stacked on a washing machine from the same manufacturer. The depth and width of this appliance must correspond with the dimensions of the washing machine. Do not place the washer-dryer stack on a platform.
Against a wall 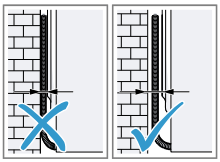	Do not trap the hoses and power cord between the wall and the appliance.

4.4 Water outlet hose

Condensation that forms in the appliance as it dries the laundry is collected by default in the condensation

container. Use the water outlet hose to drain away excess condensation directly into the waste water system.

Note

- Operate this appliance using the water outlet hose provided.
  → *Page 14*
  If you connect the water outlet hose, you do not have to regularly empty the condensation container.
  → *"Emptying the condensation container", Page 33*

Connecting the water outlet hose

If you do not want to regularly empty the appliance's condensation container, connect the water outlet hose.

ATTENTION!
When operating the appliance without the condensation hose or water outlet hose being connected properly, liquid may leak out of the connecting piece.

- ▸ Before operating the appliance, connect the condensation hose or water outlet hose properly to the connecting piece.

Requirements

- The appliance and the accessory have been unpacked. → *Page 12*
- The appliance is installed at the installation location. → *Page 12*

1. Pull out the condensation hose from the connecting piece.

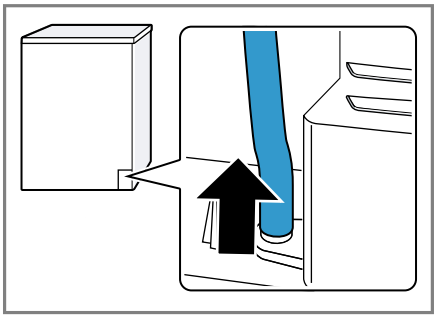

The condensation hose is connected to the connecting piece at the factory.

Note: When removing the condensation hose, liquid may leak out of the connecting piece.

2. Push the condensation hose into the holder.

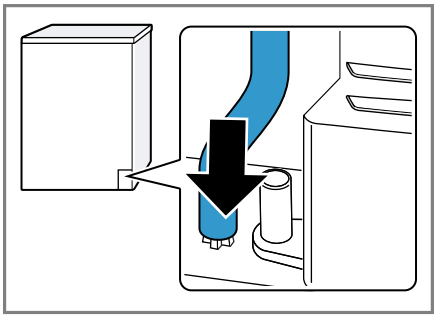

3. Push the water outlet hose as far as it will go into the connecting piece.

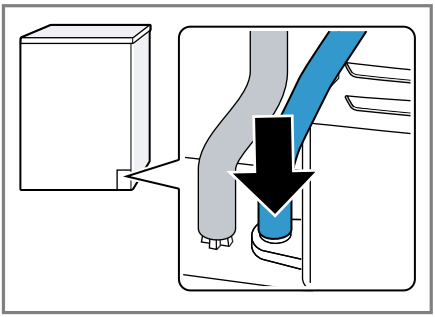

4. Insert the water outlet hose into the hose guide.

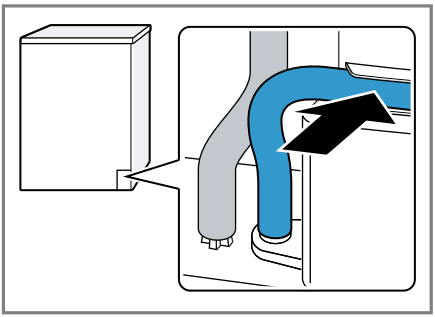

Ensure that you do not bend the water outlet hose.

5. Empty the condensation container. → *Page 33*
6. Insert the condensation container. → *Page 33*
7. Connect the appliance to the water drain. → *Page 15*

Tip: To collect condensation in the condensation container again (e.g. if you change where the appliance is located), carry out these steps in reverse order.

Water outlet connection types

ATTENTION!
In the event of a blocked or covered outlet, accumulated wastewater can flow back into the appliance.

- Before operating the appliance, ensure that the wastewater drains away quickly and eliminate any blockages.

Drainage into a siphon. 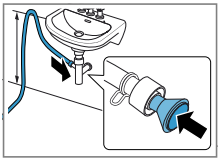	Secure the connection point with a (12-22 mm) hose clamp. Secure the water outlet hose with a hose guide at a height of at least 80 cm and no more than 100 cm. **Note:** You can use the Y-distributor → *Page 27* to connect the water outlet hose of an additional appliance, such as a washing machine, to the same siphon outlet.
Drainage into a wash basin. 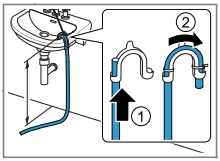	Push the water outlet hose fully through the elbow and secure it using fixing material. Secure the elbow at a height of no more than 100 cm.
Drainage into a gully.	Push the water outlet hose fully through the el-

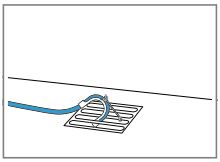

bow and secure it using fixing material.
Secure the elbow to the gully.

4.5 Aligning the appliance

In order to reduce vibrations and noises, align the appliance correctly.

- To align the appliance, turn the appliance feet. Check that the appliance is level using a spirit level.

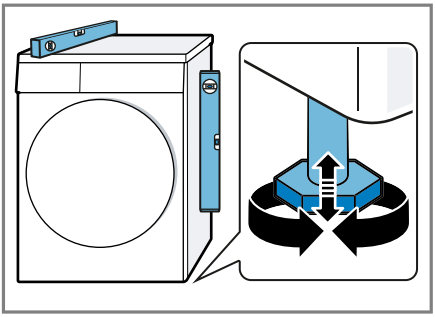

All appliance feet must stand firmly on the ground.

4.6 Connecting the appliance to the electricity supply

1. Insert the mains plug of the appliance's power cable in a socket nearby.

   The connection details of the appliance can be found under Technical data → *Page 47*.
2. Check the mains plug is inserted properly.

5 Familiarising yourself with your appliance

5.1 Appliance

You can find an overview of the parts of your appliance here.

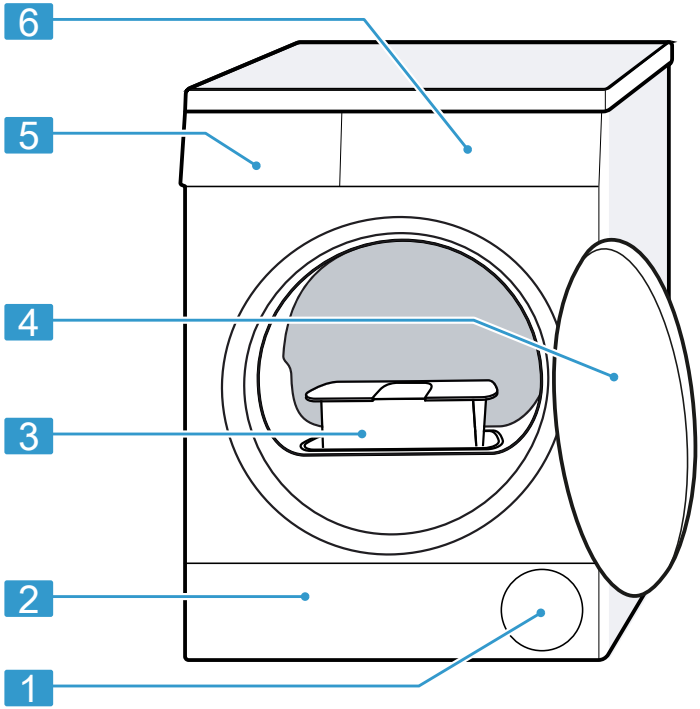

On certain models, specific details such as the colour and shape may differ from those pictured.

1	Ventilation opening	4	Door → *Page 28*
2	Maintenance flap on the base unit → *Page 35*	5	Condensation container → *Page 33*
3	Fluff filter → *Page 29*	6	Control panel → *Page 18*

5.2 Control panel

You can use the control panel to configure all functions of your appliance and to obtain information about the operating status.

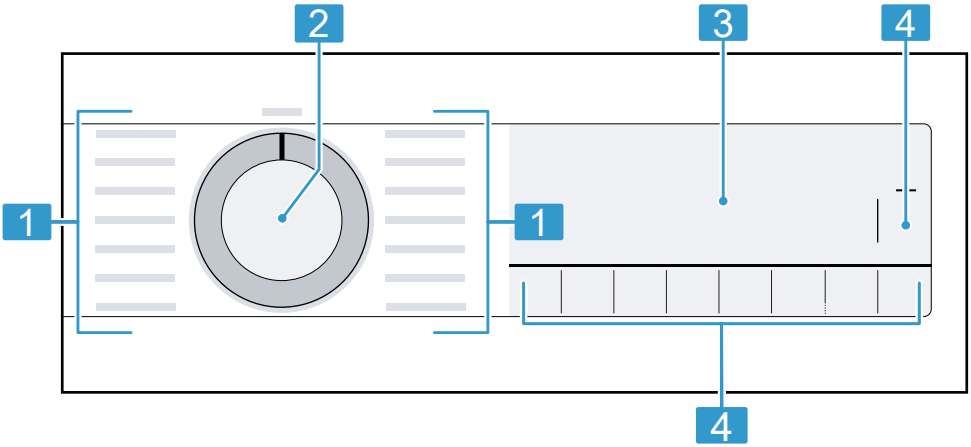

1	Programmes → *Page 24*
2	Programme selector → *Page 28*
3	Display → *Page 19*
4	Buttons → *Page 21*

6 Display

The display shows the current settings, options or relevant information. Depending on the programme status, the display shows some information in the 8:88 area, e.g. End.

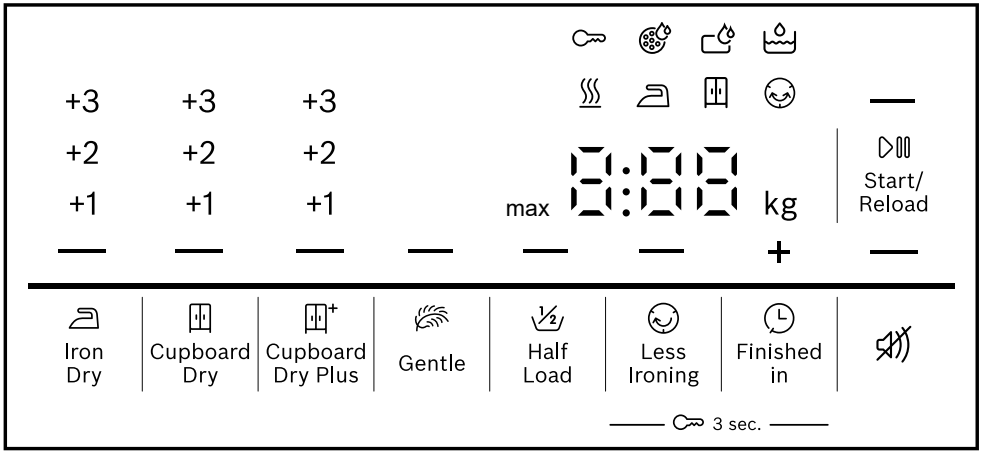

Example: Display

Indicator	Description
0:40 [1]	Expected programme duration or programme time remaining in hours and minutes.
1:25	The timed programme is set. → *Page 25*
9.0[1]	Recommendation for the maximum load capacity for the selected program in kg.
+ 0:45 [1]	Program end time → *"Buttons", Page 23*
	■ Lights up: The childproof lock is activated. ■ Flashes: The childproof lock is activated and the appliance has been operated. → *"Deactivating the childproof lock", Page 34*
— (▷II Start/Reload)	Start, cancel or pause ■ Lights up: The programme is running and can be cancelled or paused. ■ Flashes: The programme can be started or continued.
— (Iron Dry)	The dryness level is activated. → *Page 33*
— (Cupboard Dry)	The dryness level is activated. → *Page 33*
[1] Example	

Indicator	Description
▬ (Cupboard Dry Plus)	The dryness level is activated. → *Page 33*
+1 +2 +3	The adjusted dryness level is activated. → *Page 33*
▬ (Less Ironing)	The crease-reduction function is activated. → *"Buttons", Page 22*
▬ (Gentle)	Gentle drying is activated for delicate fabrics. → *Page 22*
▬ 4.5 kg (Half Load)	Half load is activated. → *Page 23*
▬ ( )	Quiet drying with no signal tones is activated. → *Page 23*
	Empty and insert the condensation container. → *Page 33*
	Clean the fluff filter → *Page 29*. Clean the filter system on the base unit. → *Page 31*
	Clean the filter system on the base unit. → *Page 31*
Hot	The cooling process cools the laundry independently of the programme status for a few minutes while the drum is rotating, in order to avoid damage to the laundry. The cooling process can be cancelled by opening the door. **Note:** Do not change the set programme.
	Programme status: Drying
	Programme status: Iron dry dryness level
	Programme status: Cupboard Dry dryness level
	Programme status: Crease-reduction function
▬ (Start/Reload)	Programme status: Pause
End	Programme status: Programme end
[1] Example	

7 Buttons

Below is an overview of the buttons and their setting options.

Button	Selection	Description
Start/Reload	■ Start ■ Cancel ■ Pause	Start, cancel or pause the programme.
3 sec.	■ Activate ■ Deactivate	Activate or deactivate the childproof lock. Disable the control panel to prevent unwanted or accidental operation. If the childproof lock is activated and the appliance has been switched off, the childproof lock remains activated. → *"Childproof lock", Page 34*
Cupboard Dry Plus	■ Cupboard Dry Plus ■ +1 ■ +2 ■ +3	■ Selecting Cupboard Dry Plus activates the dryness level. The dryness level defines how damp or dry the laundry is after the programme ends. → *"Dryness level", Page 33* ■ The dryness level can be adjusted by selecting +1 , +2 or +3 . → *"Adjusting the dryness level", Page 34*

Button	Selection	Description
Cupboard Dry	■ Cupboard Dry ■ +1 ■ +2 ■ +3	■ Selecting Cupboard Dry activates the dryness level. The dryness level defines how damp or dry the laundry is after the programme ends. → *"Dryness level", Page 33* ■ The dryness level can be adjusted by selecting +1 , +2 or +3 . → *"Adjusting the dryness level", Page 34*
Iron Dry	■ Iron Dry ■ +1 ■ +2 ■ +3	■ Selecting Iron Dry activates the dryness level. The dryness level defines how damp or dry the laundry is after the programme ends. → *"Dryness level", Page 33* ■ The dryness level can be adjusted by selecting +1 , +2 or +3 . → *"Adjusting the dryness level", Page 34*
Less Ironing	■ Activate ■ Deactivate	Activate or deactivate the crease-reduction function. Once the programme has ended, the drum moves the laundry at regular intervals for 120 minutes to prevent creasing.
Gentle	■ Activate ■ Deactivate	Activate or deactivate gentle drying. The temperature is reduced for delicate fabrics, e.g. polyacrylic or elastane. The programme duration is extended.

Button	Selection	Description
Finished in	■ Programme end time ■ Programme duration	■ Set the programme end time. The programme duration is already included in the set number of hours. Once the programme has started, the programme duration is displayed. ■ Set the programme duration for timed programmes. → *"Timed programmes", Page 25*
	■ Activate ■ Deactivate	Activate or deactivate operating signals and information signals.
Half Load	■ Activate ■ Deactivate	Dry individual items of laundry or small loads of laundry.

8 Programmes

You can dry your fabrics using either an automatic programme or a timed programme.

8.1 Automatic programmes

Automatic programmes are programmes in which humidity sensors measure the residual moisture in the laundry during the drying cycle. The programme only ends once the set dryness level is reached.
Each automatic programme has a dryness level → *Page 33*. The dryness level defines how dry or damp the laundry is after the programme ends.

Tips

- Select the dryness level according to the type of fabric or the desired drying result.
- The laundry's care labels provide you with additional information about programme selection.

Programme	Description	Max. load (kg)
Cottons	Dry hard-wearing, heat-resistant fabrics made of cotton or linen.	9.0
Eco	Dry hard-wearing, heat-resistant fabrics made of cotton or linen. Energy-saving programme.	9.0
Easy-Care	Dry items made of synthetic materials or blended fabrics.	3.5
Mix	Dry items made of cotton and synthetics.	3.0
Duvet	Dry clothing, pillows, quilts or bedspreads filled with synthetic fibres. **Note:** Dry large items of laundry, blankets or pillows individually.	2.5
Delicates	Dry delicate items made of satin, synthetics or blended fabrics.	2.0
Down	Dry clothing, bedspreads or eiderdowns stuffed with down. **Notes** ▪ Dry large items of laundry, such as blankets or sleeping bags, separately. ▪ Once the programme has ended, shake the items of laundry to distribute the stuffing and eliminate any pockets of moisture.	1.5

Programme	Description	Max. load (kg)
	■ If you dry the pillows and the pillows are not completely dry at the end of the programme, dry the pillows with a timed programme. → *Page 25*	
Sportswear	Dry self-drying sportswear made of performance fibres, microfibres and synthetics.	1.5
Shirts/Blouses	Suitable for shirts and blouses made of cotton, linen, synthetics or blended fabrics. **Note:** For optimal drying results, dry a maximum of 5 shirts or 5 blouses at the same time. Once the laundry is dry, iron it or hang it up. The residual moisture is then distributed evenly.	1.5
Super Quick 40'	Dry items made of synthetics and light cotton.	1.0
Towels	Dry hard-wearing, heat-resistant towels and dressing gowns made of cotton or linen.	6.0

8.2 Timed programmes

Timed programmes are programmes with a defined or adjustable programme duration. The programme ends once this time has elapsed, even if the laundry is still not dry, for example. Timed programmes are suitable for drying individual items of laundry or thin fabrics.

Tip: The laundry's care labels provide you with additional information about programme selection.

Programme	Description	Max. load (kg)
Wool Finish	Dry machine-washable items made of wool or containing wool. **Note:** The laundry becomes fluffier but not dry. Remove laundry once the programme has ended and allow it to dry.	0.5

Programme	Description	Max. load (kg)
Time Program Cold ◷	Fluff/loosen all fabric types except for wool and silk. This programme is suitable for fluffing dry laundry only. Also suitable for freshening up or airing dry clothing that has hardly been worn.	3.0
Time Program Warm ◷	Dry all types of fabric except for wool and silk. Suitable for pre-dried or slightly damp laundry and for drying off multi-layered, thick laundry.	3.0

9 Accessories

Use original accessories. These have been made especially for your appliance.

Tip: Some accessories are available in other colours. Contact customer service. → *Page 43*

	Use	Order number
Connection kit	To save space, stack the appliance on a suitable washing machine of the same width and depth and that is from the same manufacturer.	WTZ27410
Connection kit with pull-out worktop	To save space, stack the appliance on a suitable washing machine of the same width and depth and that is from the same manufacturer. The pull-out worktop makes it easier to load and unload the appliance.	WTZ27400
Wool basket	Dry or air individual woollen items, sports shoes and soft toys.	WMZ20600
Y-distributor	Connect the water outlet hose of an additional appliance to the same siphon outlet.	15000490
Water outlet hose	Drain away excess condensation directly into the waste water system, without having to regularly empty the condensation container.	WTZ1110
Filter mat	Spare part to protect against fluff for the base unit's filter system.	12022801

	Use	Order number
Platform	Install the appliance at a raised height so that it can be easily loaded and unloaded.	WTZPW20D

10 Laundry

10.1 Preparing the laundry

ATTENTION!
Objects remaining in the laundry may damage the laundry and the drum.
- Remove all items from any pockets in your laundry before using the appliance.

Note
The appliance and fabrics are protected when you prepare your laundry.
- Brush off sand and soil
- Sort the laundry according to colour and textiles and observe the care labels
- Close all zips, hook and loop fasteners, hooks and eyes
- Remove curtain fittings and lead strips
- Load the laundry unfolded into the drum
- Spin the laundry before drying
- Dry woollen items, sports shoes and soft toys in the wool basket

11 Basic operation

11.1 Switching on the appliance

Requirement: The appliance has been correctly installed and connected. → *Page 12*

- Turn the programme selector to a programme.

11.2 Setting a programme

1. Turn the programme selector and set the required programme.
   → *"Programmes", Page 24*
2. If required, adjust the programme settings.
   → *"Buttons", Page 21*

   The programme settings are not saved permanently for the programme.

11.3 Opening the door

1. Grip under the door handle and pull on the door.

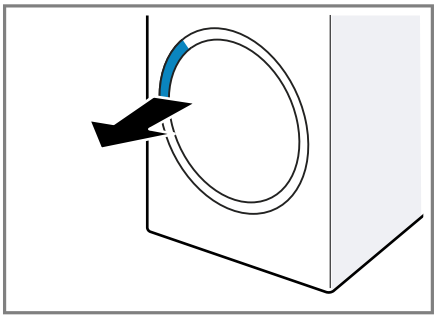

2. Open the door.

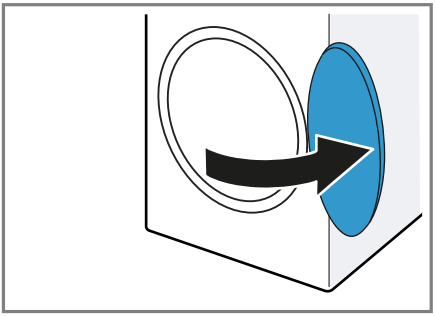

11.4 Loading laundry

Note: To prevent creasing, note the maximum load for the programmes.
→ *"Programmes", Page 24*

Requirements

- The laundry is prepared and sorted.
  → *"Laundry", Page 28*
- The drum is empty.

1. Open the door. → *Page 28*
2. Place the laundry in the drum.
3. Close the door.

   Ensure that there is no laundry trapped in the door.

11.5 Starting the programme

Requirement: A programme is set.
→ *Page 28*

- Press ▷II **Start/Reload**.
- ✔ The display shows the programme duration or the programme end time.
- ✔ After the programme has ended, the display shows: "End" .

Note: When "Hot" is shown on the display, the appliance cools the laundry.
When "Hot" goes out, the laundry has cooled down.

11.6 Adding laundry

After the programme starts, you can remove or add laundry at any time.

1. Press ▷II **Start/Reload**.

   The cooling process starts automatically after approximately 30 seconds and cools down the laundry while the drum is rotating. If you want to avoid or cancel the cooling process, open the door.
   → *Page 20*
2. Open the door. → *Page 28*
3. Add or remove laundry.
4. Close the door.
5. Press ▷II **Start/Reload**.

11.7 Cancelling the programme

1. Press ▷II **Start/Reload**.
2. Open the door. → *Page 28*
3. Remove the laundry. → *Page 29*

11.8 Unloading the laundry

1. Open the door. → *Page 28*
2. Remove the laundry from the drum.

11.9 Switching off the appliance

- Turn the programme selector to **Off** .

11.10 Fluff filter

During drying, fluff from the laundry is collected in the fluff filter. The fluff filter protects the appliance from fluff.

Cleaning the fluff filter

If the drying programme has finished or the display shows a notification while the appliance is in operation, clean the fluff filter.

Note: If you do not clean the appliance as described, the appliance's functionality may be impaired.

Requirements

- The display shows the following after drying: "End"
- or the display shows the following during operation: .

1. Open the door. → *Page 28*
2. Remove the fluff from the door.

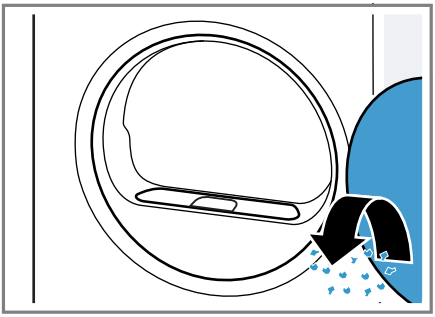

3. Remove the two-part fluff filter.

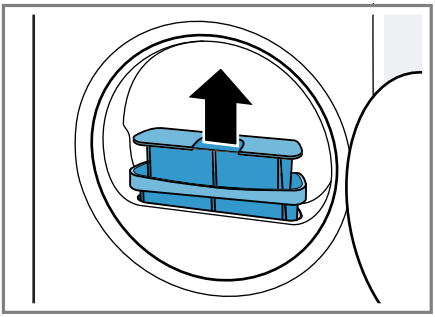

4. Remove the fluff from the recess.

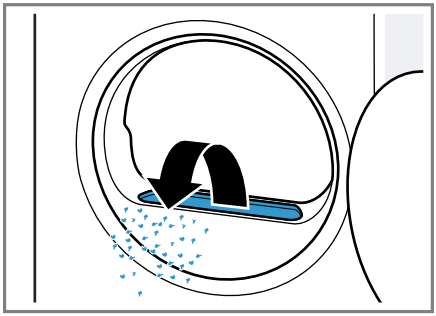

Ensure that no fluff falls into the air channel.

5. Disconnect the two-part fluff filter.

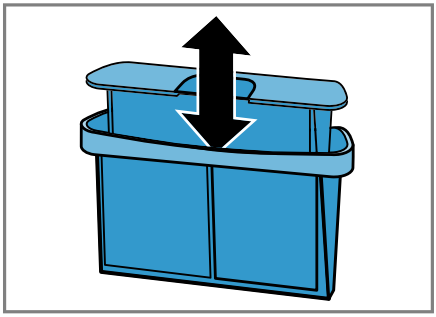

6. Open the two fluff filters.

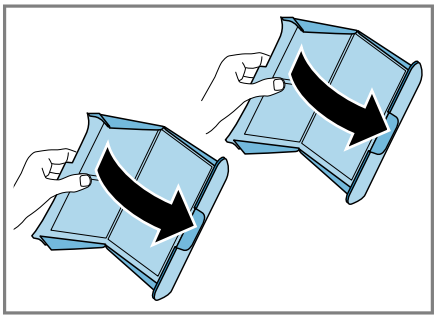

7. Remove the fluff.

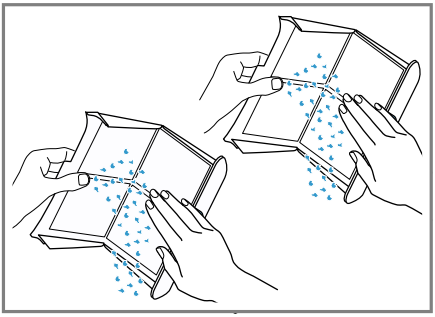

Dispose of the fluff with the household waste in order to prevent the water from being contaminated with microplastics.

8. Clean the two fluff filters thoroughly under warm, running water and then dry them off.

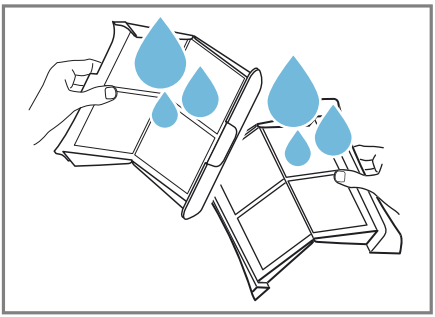

9. Close the two fluff filters and put them together.

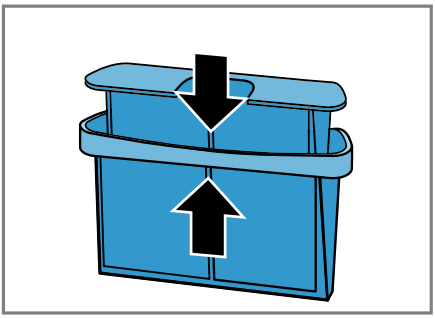

10. Insert the two-part fluff filter.

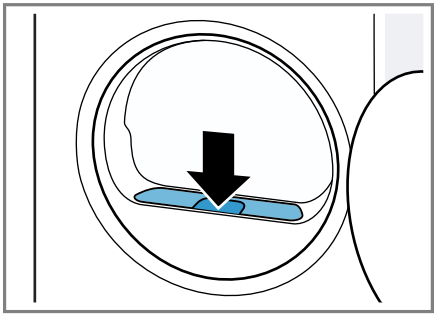

11. Close the door.

11.11 Filter system on the base unit

During drying, fluff from the laundry is collected in the base unit's filter system. The filter system protects the appliance from fluff.

Cleaning the filter system on the base unit

If the display shows a notification while the appliance is in operation, clean the base unit's filter system.

Notes

- You can clean the filter regularly system even without the notification being shown on the display. It is not necessary to clean after each drying cycle.
- If you do not clean the appliance as described, the appliance's functionality may be impaired.

Requirement: The display shows the following during operation: .

1. Clean the fluff filter → *Page 29*.
2. Open the base unit. → *Page 35*

3. Carefully remove the filter mat from the retainers.

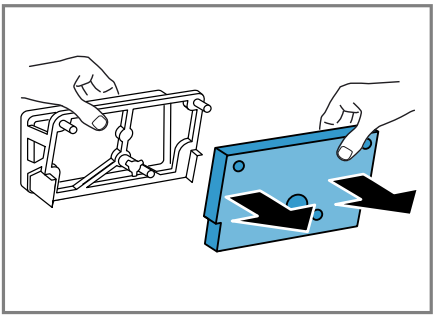

Ensure that you do not deform or damage the filter mat.

4. Use a soft brush to clean the heat exchanger cover.

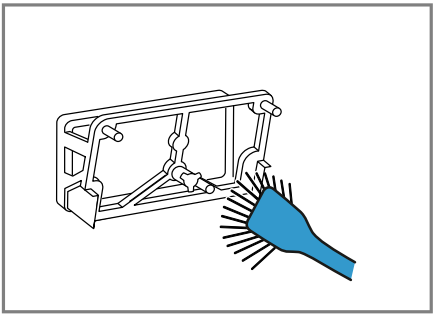

Make sure that you remove all dirt from the seal.

5. Clean the filter mat thoroughly under warm, running water and squeeze it out by hand.

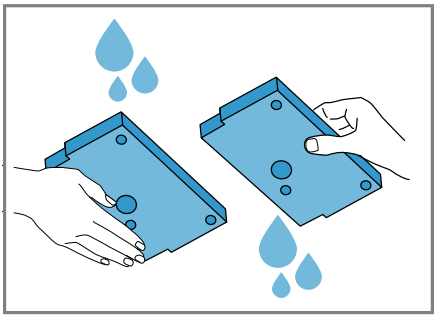

You can remove heavy soiling carefully using a vacuum cleaner. Do not clean the filter mat using cleaning products.

6. Push the filter mat onto the retainers.

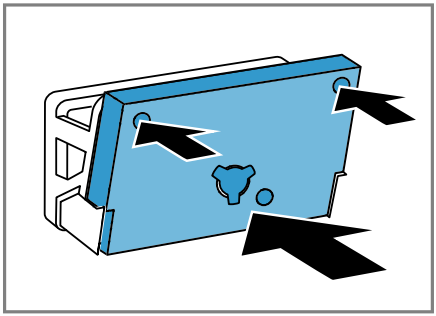

Ensure that the cleaned filter mat is not deformed, damaged or inverted when you push it onto the retainers.

Note: You can order the filter mat → *Page 27* as a spare part from customer service.

7. Close the base unit. → *Page 38*

11.12 Condensation container

Condensation that forms in the appliance as it dries the laundry is collected by default in the condensation container.

Note: Operate this appliance using the water outlet hose provided.
→ *Page 14*
If you connect the water outlet hose, you do not have to regularly empty the condensation container.
→ *"Emptying the condensation container", Page 33*

Emptying the condensation container

If the drying programme has finished or the display shows a notification while the appliance is in operation, empty the condensation container.

Requirements
- The display shows the following after drying: "End"
- or the display shows the following during operation: .

1. Pull out the condensation container, keeping it level.

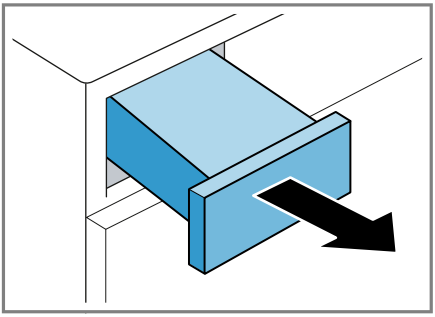

2. Empty the condensation container.

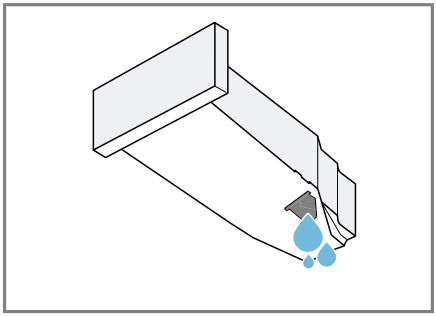

Make sure that you insert the condensation container before operating the appliance. → *Page 33*

Inserting the condensation container

- Push the condensation container in as far as it will go.

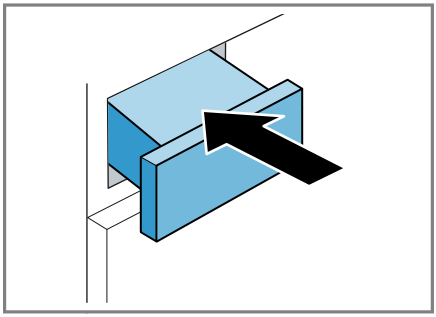

12 Dryness level

Each automatic programme has a specified dryness level. The dryness level defines how dry or damp your laundry is after the programme ends.

Dryness level	Description
Cupboard Dry Plus	For multi-layered, thick laundry that does not dry readily.

Dryness level	Description
Cupboard Dry	For normal, single-layered laundry.
Iron Dry	For normal, single-layered laundry. The laundry is still slightly damp after the programme ends. To prevent creasing after drying, iron the laundry or hang it up.

12.1 Changing the dryness level

For some automatic programmes, you can change the dryness level so that your laundry will be drier or more damp.

1. Set an automatic programme. → *Page 24*
✔ The display shows the specified dryness level.
2. Press **Cupboard Dry**, **Cupboard Dry Plus** or **Iron Dry**.
✔ The display shows — (Cupboard Dry), — (Cupboard Dry Plus) or — (Iron Dry).

12.2 Adjusting the dryness level

If the laundry feels too damp after it has been dried to a particular dryness level, you can adjust the dryness level.

1. Set an automatic programme. → *Page 24*
✔ The display shows the specified dryness level.
2. Press **Cupboard Dry**, **Cupboard Dry Plus** or **Iron Dry**.
3. Press the set drying target again to adjust the dryness level.
✔ The display shows "+1" , "+2" or "+3" .

13 Childproof lock

Secure your appliance against being operated unintentionally using the controls.

13.1 Activating the childproof lock

▸ Press on both **3 sec.** buttons for approx. 3 seconds.
✔ The display shows .
✔ The control elements are locked.
✔ The childproof lock remains active even after the appliance has been switched off and in the event of a power cut.

13.2 Deactivating the childproof lock

Requirement: To deactivate the childproof lock, the appliance must be switched on.

▸ Press on both **3 sec.** buttons for approx. three seconds.

So that the programme currently running is not cancelled, the programme selector must be set to the initial programme.

✔ goes out on the display.

14 Basic settings

You can configure the basic settings for your appliance to meet your needs.

14.1 Overview of the basic settings

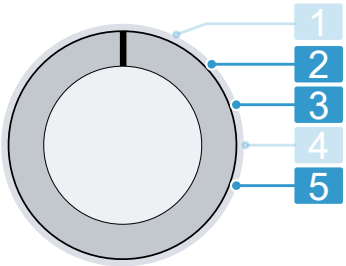

Programme selector with programme positions

2	Set the volume of the signal at the end of the programme: 0 (off) to 4 (very loud)
3	Set the volume of the signal tone emitted when the buttons are pressed: 0 (off) to 4 (very loud)
5	Display the number of started programmes.

14.2 Changing the basic settings

1. Set the programme selector to position 1. → *Page 35*
2. Press **Iron Dry** and, at the same time, turn the programme selector to position 2.
✔ The display shows the current value.
3. Use the programme selector to select the required basic setting. → *Page 35*
4. To change the value, press **Finished in**.
5. To save the changes, switch off the appliance.

15 Cleaning and servicing

To keep your appliance working efficiently for a long time, it is important to clean and maintain it carefully.

15.1 Base unit

The base unit is the accessible area at the bottom of the appliance in which you will find the heat exchanger.

Opening the base unit

Requirements

- The appliance has cooled down for 30 minutes.
- The appliance door is closed.

1. Open the maintenance flap.

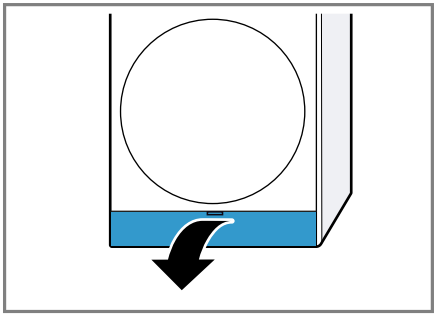

If you place a cloth beneath the maintenance flap, you can collect the remaining water from the base unit.

2. Open the lever for the heat exchanger cover.

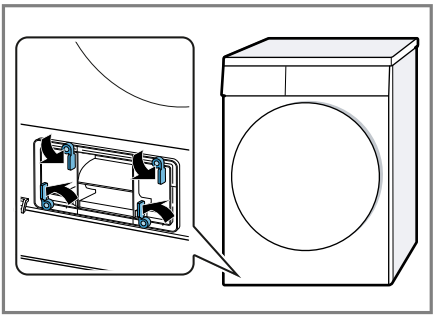

3. Pull out the heat exchanger cover by the handle.

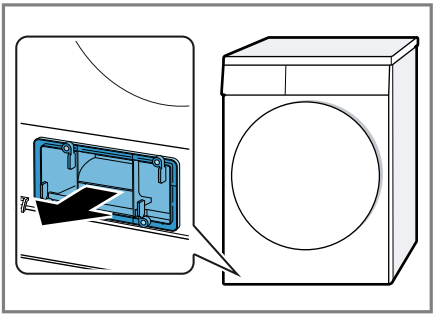

Cleaning the base unit

You can remove any visible dirt in the base unit.

⚠ **CAUTION**
Risk of cutting!
Touching sharp edges on the heat exchanger may lead to cuts.
- Do not touch the fins on the heat exchanger.

1. Open the base unit → *Page 35*.

2. Use a soft brush to clean the heat exchanger cover.

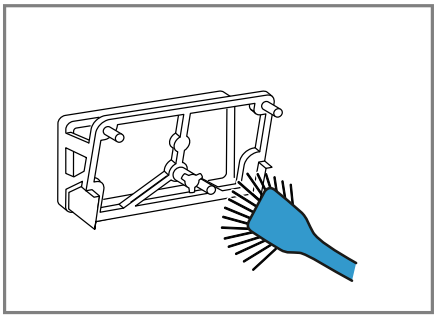

Make sure that you remove all dirt from the seal.

3. Lift the middle tab on the insert slightly.

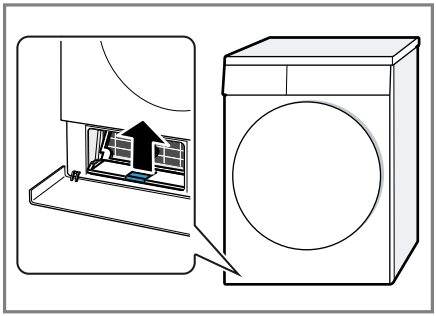

4. Pull the insert out horizontally.

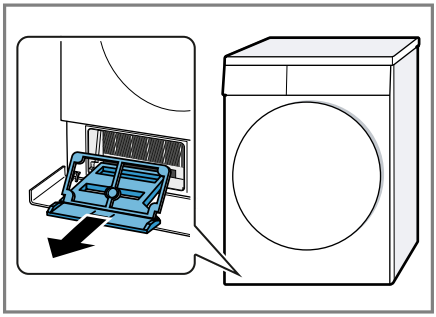

5. Clean the insert under running water and dry it off.

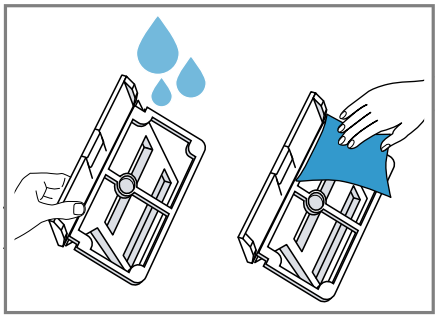

6. Carefully clean the fins on the heat exchanger with a vacuum cleaner and brush attachment.

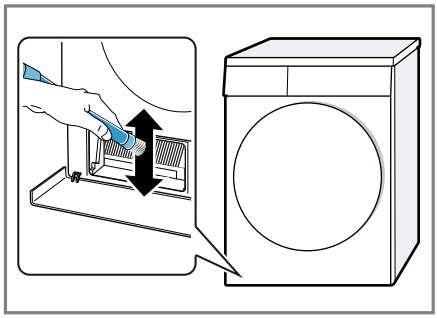

Ensure that you vacuum the fins from top to bottom so that they do not become deformed or damaged.

7. Carefully clean the air inlet grille with a vacuum cleaner and brush attachment.

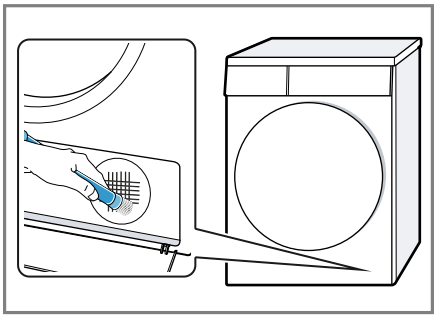

In doing so, ensure that you do not deform or damage the grille.

8. Clean the opening with a soft, damp cloth.

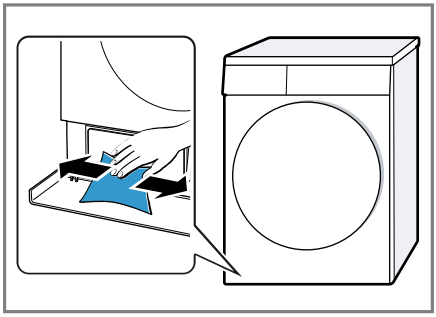

9. Push the insert in horizontally until the tab clicks into place.

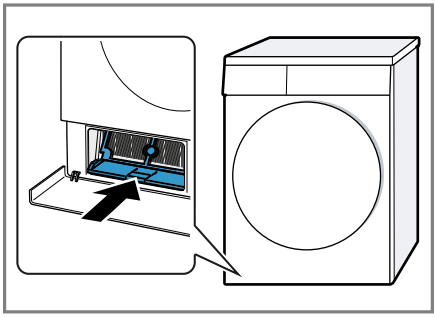

10. Close the base unit → *Page 38*.

Closing the base unit

Requirement: The base unit is open.
→ *"Opening the base unit", Page 35*

1. Insert the heat exchanger cover by the handle.

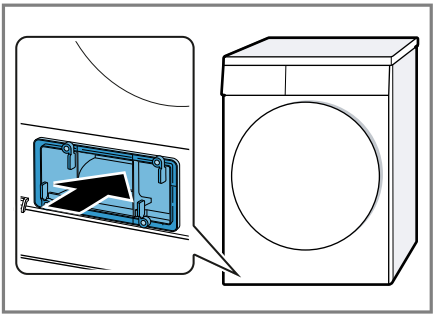

2. Close the lever for the heat exchanger.

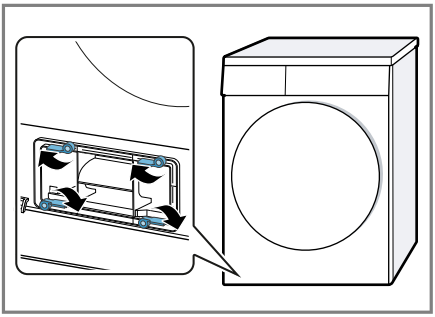

3. Close the maintenance flap.

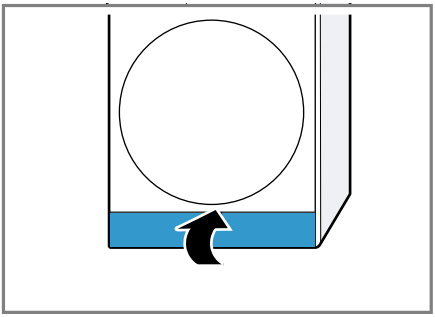

15.2 Moisture sensor

The moisture sensor in this appliance measures how damp the laundry is during the drying cycle. The appliance changes the duration of the automatic programme depending on the residual moisture in the laundry.

Cleaning the moisture sensor

Over time, residue from limescale, detergents and care products can build up on the moisture sensor. Clean the moisture sensor regularly.

ATTENTION!
Hard or rough objects may damage the moisture sensor.

- Do not use hard or rough objects, abrasive cleaning products or steel wool for cleaning.

Note: If you do not clean the appliance as described, the appliance's functionality may be impaired.

1. Open the door.
2. Clean the moisture sensor with a sponge.

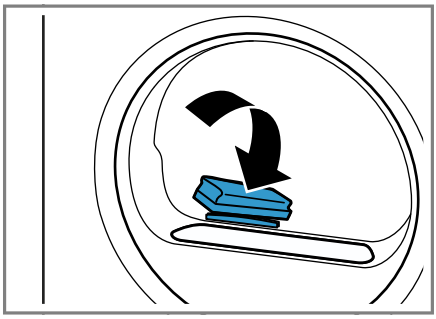

16 Troubleshooting

You can rectify minor faults on your appliance yourself. Read the troubleshooting information before contacting after-sales service. This will avoid unnecessary costs.

⚠ **WARNING**
Risk of electric shock!
Improper repairs are dangerous.
- Never make any technical modifications to the appliance or its features.
- Repairs to the appliance should only be carried out by trained specialist staff.
- Only use genuine spare parts when repairing the appliance.
- If the power cord of this appliance is damaged, it must be replaced by the manufacturer, the manufacturer's Customer Service or a similarly qualified person in order to prevent any risk.

Fault	Cause and troubleshooting
The display goes out and ▷II **Start/Reload** flashes.	Energy-saving mode is active ▸ Press ▷II **Start/Reload**.
"Hot" and the drum rotates.	Not a fault. The cooling process is active. No action required. **Note:** Do not change the programme during the cooling process. The cooling process takes up to 10 minutes.
and programme terminated.	The condensation container is full. ▸ Empty the condensation container. → *Page 33*
	The water outlet hose is not connected correctly, or is kinked or trapped. ▸ Check the installation of the water outlet hose. → *Page 13*
	Water outlet hose is blocked. ▸ Rinse the water outlet hose with tap water.
	A foreign object is in the base unit. 1. Open the base unit. → *Page 35* 2. Remove any foreign objects. 3. Close the base unit. → *Page 38*
	Fluff filter is soiled. ▸ Clean the fluff filter. → *Page 29*
	Filter system on the base unit is dirty. ▸ Clean the filter system on the base unit. → *Page 31*

Fault	Cause and troubleshooting
	Filter system on the base unit is dirty. ▸ Clean the filter system on the base unit. → *Page 31*
The programme does not start.	Childproof lock is activated. ▸ Deactivate the childproof lock. → *Page 34*
	Finished in is activated. ▸ Check whether **Finished in** is activated. → *Page 23*
The length of the programme changes during the drying cycle.	Not a fault. The programme sequence is optimised electronically. No action required.
The drying time is too long.	Filter system on the base unit is dirty. ▸ Clean the filter system on the base unit. → *Page 31*
	Fluff filter is soiled. ▸ Clean the fluff filter. → *Page 29*
	The ambient temperature is lower than 15 °C or higher than 30 °C. ▸ Ensure that the ambient temperature is between 15 °C and 30 °C.
	The air circulation at the appliance's installation location is insufficient. ▸ Ventilate the appliance's installation location.
	The appliance's ventilation opening is blocked. ▸ Ensure that the ventilation opening of the appliance is kept clear.
	Heat exchanger is soiled. 1. Open the base unit. → *Page 35* 2. Clean the heat exchanger. → *Page 36* 3. Close the base unit. → *Page 38*
Humming, whirring or pumping noises.	Not a fault. The compressor, compressor ventilation or condensation pump is active. No action required.
The laundry is too damp.	The selected programme is unsuitable for the type of fabric. ▸ Set a time programme for subsequent drying. → *Page 25*
	The load is too large. ▸ Observe the programme's maximum load capacity. → *Page 24*
	After the end of the programme, warm laundry feels damper than it actually is.

Fault	Cause and troubleshooting
The laundry is too damp.	1. Remove the laundry from the drum as soon as the drying programme has finished. 2. Spread the items of laundry for cooling.
	The selected dryness level is unsuitable. ▸ Change the dryness level. → *Page 34*
	The dryness level is not adjusted. ▸ Adjust the dryness level. → *Page 34*
	The load is too small. ▸ Set a time programme for subsequent drying. → *Page 25*
	The moisture sensor is dirty. ▸ Clean the moisture sensor. → *Page 38*
	The appliance has interrupted the drying process due to the condensation container being full. ▸ Empty the condensation container. → *Page 33*
Creasing.	The selected programme is unsuitable for the type of fabric. ▸ Set a suitable programme. → *Page 24*
	The load is unsuitable. ▸ Observe the programme's maximum load capacity. → *Page 24* ▸ Prepare the laundry. → *Page 28*
	The laundry lies in the drum for too long after drying. 1. Remove the laundry from the drum as soon as the drying programme has finished. 2. Spread the items of laundry for cooling.
	Easy Care fabrics have been dried for too long. ▸ Change or adjust the dryness level. → *Page 33*
	The crease-reduction function is not activated. ▸ Activate the crease-reduction function. → *Page 21*
Water is leaking from the appliance.	Appliance is not correctly aligned. ▸ Align the appliance. → *Page 16*
	The seal for the heat exchanger cover is dirty. ▸ Clean the seal for the heat exchanger cover. → *Page 31*
	Water outlet hose is not connected correctly. ▸ Check the installation of the water outlet hose. → *Page 13*

Fault	Cause and troubleshooting
Water is leaking from the appliance.	The lever for the heat exchanger cover is not closed correctly. ▸ Ensure that the lever for the heat exchanger cover is closed correctly. → *Page 38*
Condensation collects in the condensation container despite the water outlet hose being connected.	Not a fault. The remaining volume of condensation may remain in the condensation container. No action required.
	Water outlet hose is not connected correctly. ▸ Check the installation of the water outlet hose. → *Page 13*

17 Transportation, storage and disposal

17.1 Disposing of old appliance

Valuable raw materials can be reused by recycling.

⚠ **WARNING**
Risk of harm to health!
Children can lock themselves in the appliance, thereby putting their lives at risk.
- Do not install the appliance behind a door as this may obstruct the appliance door or prevent it from opening.
- With redundant appliances, unplug the power cord. Then cut through the cord and damage the lock on the appliance door beyond repair so that the appliance door will no longer close.

⚠ **WARNING**
Risk of fire!
The refrigerant R290 used in this appliance is environmentally friendly. It is however flammable and may ignite if appliances are not disposed of properly.
- Dispose of the appliance properly.
- Do not damage the tubing of the refrigerant circuit.

1. Unplug the appliance from the mains.
2. Cut through the power cord.
3. Dispose of the appliance in an environmentally friendly manner.

   Information about current disposal methods are available from your specialist dealer or local authority.

This appliance is labelled in accordance with European Directive 2012/19/EU concerning used electrical and electronic appliances (waste electrical and electronic equipment - WEEE).
The guideline determines the framework for the return and recycling of used appliances as applicable throughout the EU.

18 Customer Service

Function-relevant genuine spare parts according to the corresponding Ecodesign Order can be obtained from Customer Service for a period of at least 10 years from the date on which your appliance was placed on the market within the European Economic Area.

Note: Under the terms of the manufacturer's warranty the use of Customer Service is free of charge.

Detailed information on the warranty period and terms of warranty in your country is available from our aftersales service, your retailer or on our website.
If you contact Customer Service, you will require the product number (E-Nr.) and the production number (FD) of your appliance.
The contact details for Customer Service can be found in the enclosed Customer Service directory or on our website.

18.1 Product number (E-Nr.) and production number (FD)

You can find the product number (E-Nr.) and the production number (FD) on the appliance's rating plate. Depending on the model, the rating plate is located:

- On the inside of the door.
- On the inside of the maintenance flap.
- On the rear of the appliance.

Make a note of your appliance's details and the Customer Service telephone number to find them again quickly.

19 Consumption values

The **Eco** programme is suitable for drying cotton laundry with a normal dampness level, and is the most efficient programme for drying damp cotton laundry in terms of combined energy consumption. This programme serves to assess compliance with Regulations (EU) 2023/2533 and (EU) 2023/2534. It corresponds to the "standard cotton programme" within the meaning of Regulation (EU) No 392/2012 and within the meaning of Annex I, point 1.1 of Regulation (EU) No 932/2012. The consumption values for this programme that are declared on the energy label refer to a moisture content of the laundry of 60%.
The values specified for other programmes are indicative only and were determined in accordance with the applicable standard EN61121.

The actual values may deviate from the indicated values depending on the type of fabric, composition of laundry to be dried, residual moisture in the fabric, set degree of dryness, amount of laundry being loaded, environmental conditions and the activation of additional functions.
The expected programme duration/"Ready in" time that is shown on the appliance display when selecting the programme is based on the spin speed in the washing machine of 1000 rpm when the appliance is delivered.

Programme	Final moisture level (%)	Load (kg)	Spin speed (rpm)	Initial moisture level (%)	Programme duration (h:min)	Energy consumption (kWh/cycle)
Cottons + Cupboard Dry Plus	-3.0	9.0	1400	50	3:36	2.40
Cottons + Cupboard Dry Plus	-3.0	4.5	1400	50	3:38	1.71
Cottons + Cupboard Dry Plus	-3.0	9.0	1000	60	4:00	2.64
Cottons + Cupboard Dry Plus	-3.0	4.5	1000	60	3:56	1.87
Cottons + Cupboard Dry Plus	-3.0	9.0	800	70	4:25	2.89
Cottons + Cupboard Dry Plus	-3.0	4.5	800	70	4:14	2.04

[1] The acoustical noise emissions during the drying cycle are 62 dB.

Programme	Final moisture level (%)	Load (kg)	Spin speed (rpm)	Initial moisture level (%)	Programme duration (h:min)	Energy consumption (kWh/cycle)
Cottons + Cupboard Dry	-1.5	9.0	1400	50	3:15	1.68
Cottons + Cupboard Dry	-1.5	4.5	1400	50	3:02	1.43
Cottons + Cupboard Dry	-1.5	9.0	1000	60	3:42	1.95
Cottons + Cupboard Dry	-1.5	4.5	1000	60	3:18	1.57
Cottons + Cupboard Dry	-1.5	9.0	800	70	4:09	2.21
Cottons + Cupboard Dry	-1.5	4.5	800	70	3:33	1.72
Eco	0.0	9.0	1400	50	3:32	1.73
Eco	0.0	4.5	1400	50	1:52	0.91
Eco [1]	0.0	9.0	1000	60	3:50	1.93
Eco	0.0	4.5	1000	60	2:12	1.08
Eco	0.0	9.0	800	70	4:08	2.13
Eco	0.0	4.5	800	70	2:32	1.25
Cottons + Iron Dry	12.0	9.0	1400	50	2:09	1.05
Cottons + Iron Dry	12.0	4.5	1400	50	1:43	0.77
Cottons + Iron Dry	12.0	9.0	1000	60	2:34	1.29
Cottons + Iron Dry	12.0	4.5	1000	60	2:01	0.94
Cottons + Iron Dry	12.0	9.0	800	70	2:58	1.54
Cottons + Iron Dry	12.0	4.5	800	70	2:19	1.10
Easy-Care + Cupboard Dry Plus	0.0	3.5	800	40	1:30	0.64
Easy-Care + Cupboard Dry Plus	0.0	3.5	600	50	1:48	0.76

[1] The acoustical noise emissions during the drying cycle are 62 dB.

Programme	Final moisture level (%)	Load (kg)	Spin speed (rpm)	Initial moisture level (%)	Programme duration (h:min)	Energy consumption (kWh/cycle)
Easy-Care + Cupboard Dry	2.0	3.5	800	40	1:20	0.58
Easy-Care + Cupboard Dry	2.0	3.5	600	50	1:37	0.70
Easy-Care + Iron Dry	12.0	3.5	800	40	1:29	0.60
Easy-Care + Iron Dry	12.0	3.5	600	50	1:46	0.72
Delicates	0.0	2.0	-	-	1:11	0.49

[1] The acoustical noise emissions during the drying cycle are 62 dB.

20 Technical data

Appliance height	84.2 cm
Appliance width	59.8 cm
Appliance depth	61.3 cm
Appliance depth with door closed	64.8 cm
Appliance depth with door open	109.6 cm
Weight	50.3 kg
Maximum load	9.0 kg
Mains voltage	220-240 V, 50 Hz
Minimum installation protection	10 A
Nominal power	600 W
Power consumption	■ Off mode: 0.15 W ■ Left-on mode: 0.50 W
Ambient temperature	■ Minimum: 5 °C ■ Maximum: 35 °C
Length of the power cord	145 cm

More information about your model can be found online at https://eprel.ec.europa.eu/qr/2001267[1]. This web address is linked to the official EU EPREL product database.

[1] Only applies to countries in the European Economic Area

Thank you for buying a Bosch Home Appliance!

Register your new device on MyBosch now and profit directly from:

- **Expert tips & tricks for your appliance**
- **Warranty extension options**
- **Discounts for accessories & spare-parts**
- **Digital manual and all appliance data at hand**
- **Easy access to Bosch Home Appliances Service**

Free and easy registration – also on mobile phones:
www.bosch-home.com/welcome

Looking for help? You'll find it here.

Expert advice for your Bosch home appliances, help with problems or a repair from Bosch experts.
Find out everything about the many ways Bosch can support you:
www.bosch-home.com/service
Contact data of all countries are listed in the attached service directory.

BSH Hausgeräte GmbH
Carl-Wery-Straße 34
81739 München, GERMANY
www.bosch-home.com

A Bosch Company

9001971109 (050116)
en

Valid within Great Britain:
Imported to Great Britain by
BSH Home Appliances Ltd.
Grand Union House
Old Wolverton Road
Wolverton, Milton Keynes
MK12 5PT
United Kingdom